savin®

MP 2352/MP 2852/ MP 3352

Digital Imaging System

SECURE > PRODUCE > SHARE > MANAGE > ADVANCE >

A versatile, all-in-one system designed for your environment.

Customize document management for any workflow.

Expectations are high. You're facing more tasks, more challenges—and less time. So why not demand more from your multifunction system? The SAVIN® MP 2352/MP 2852/MP 3352 offers unmatched versatility and innovative security for superior productivity and efficiency. It provides copy, print, scan and fax capabilities in a compact design so you can produce a wide range of jobs with exceptional quality. Plus, it incorporates a host of sustainable, eco-friendly features that can enable fast-paced offices to save money while conserving energy. Use it as your workhorse device to streamline workflow from creation to finishing, or integrate it into a comprehensive Managed Document Services (MDS) strategy and improve productivity while reducing total cost of ownership.

Access workflow tools, program jobs or select distribution destinations with the easy-to-use full-color LCD Control Panel.

Enhance Productivity

Accomplish every task with incredible speed and convenience. The Savin MP 2352/MP 2852/MP 3352 offers all-in-one performance for fast, cost-effective workflow.

- Deliver exceptional multifunction performance with built-in printing, copying, color scanning and faxing. The MP 2852/MP 3352 is available in two configurations—a standard scan/print version and a highly-configurable copier version, which can also be modified to print, scan or fax to suit your office environment. The MP 2352 is available in a standard scan/print configuration.
- Generate up to 33 black-and-white pages-per-minute and proceed to the next job quickly.

www.savin.com

MP 2352/MP 2852/MP 3352 Digital Imaging System

- Execute workflows seamlessly with a wide range of document distribution tools and widgets that can be tailored for your office for maximum convenience.
- Reprint, refax or scan instantly with the built-in Document Server. It stores up to 3,000 frequently-used documents to expedite workflow.

Share More Efficiently

With its wide range of scanning capabilities, this digital imaging system enables quick electronic document capture and convenient distribution options for incredible flexibility, productivity and value.

- Capture documents in monochrome or in vibrant color and reduce file sizes with high-compression PDF for faster transmission and printing without compromising image quality.
- Distribute documents instantly with Scan-to-Email or automate document sharing and archiving with Scan-to-Folder.
- Employ Scan-to-URL for network flexibility. Users can store the document on the Hard Disk Drive to reduce network traffic and view and download files via Web browser.
- Preview electronic documents as full-color thumbnails for accurate review that can enhance efficiency while minimizing wasted supplies.

Deliver High-Quality Results

The Savin MP 2352/MP 2852/MP 3352 offers powerful network printing to ensure fast-moving workflows and affordable output.

- Simplify print jobs with the icon-driven, preset PCL6 user interface driver and optional genuine Adobe® PostScript3® drivers.
- Enjoy seamless integration with Windows, Macintosh, Unix and AS/400 environments and a host of standard or optional interfaces to ensure that local network requirements are met.
- Modify queues for print jobs at any time with the Job Function List feature and meet even the most ambitious deadlines.
- Expedite jobs with PDF Direct Print. Users can print PDFs without opening Adobe Acrobat or taxing the network.
- Avoid print bottlenecks with Auto Job Promote. This feature holds a job when a resource is not available—such as a different paper size—and automatically prints the next job in the queue.

Scan To/Print From USB

Load scanned documents to portable media using Scan-to-Media capabilities with the USB/SD card slot and print TIFF, PDF and JPG files virtually anywhere.

Color Scanning

Color scanning combined with innovative Scan-To capabilities promotes cost-free document distribution and less taxing network traffic.

Quota Setting

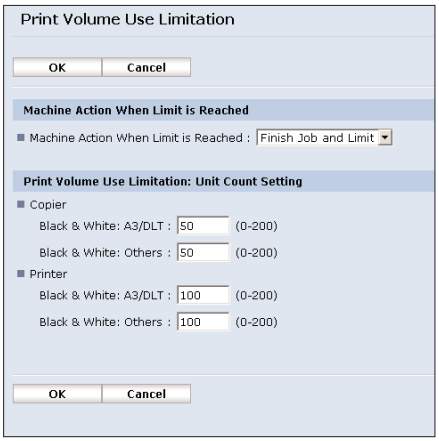

Set output limits for individuals and groups with the Quota Setting feature to effectively control print costs.

50-Sheet Automatic Reversing Document Feeder (standard)
Scan multi-page and mixed size originals quickly and easily.
(Optional for the MP 2852/MP 3352 copier only configurations)

500-Sheet External Finisher (optional)
Realize greater cost savings and productivity by printing reports and presentations in-house.

1,000-Sheet Booklet Finisher

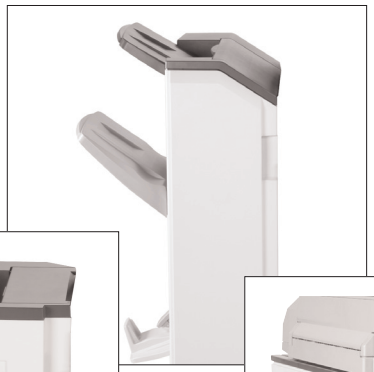

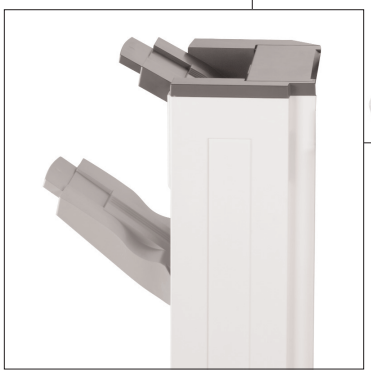

1,000-Sheet Finisher

500-Sheet Internal Finisher

Finish In-House with Style
Produce compelling, professionally finished documents and minimize outsourcing. Choose from a variety of optional finishers to design a complete end-to-end document production solution that meets your unique application demands.

1 x 500 and 1 x 550-Sheet Paper Trays (standard)
Front-facing, user-adjustable trays accommodate a wide range of paper stocks and sizes, including envelopes.

1 x 550-Sheet Paper Tray* (optional)
Provides lower height making it easy for all users to access.

2 x 550-Sheet Paper Tray* (optional)
Add more paper capacity for larger jobs and uninterrupted printing and copying.

2,000-Sheet Large Capacity Tray* (optional)
Increase total system volume up to 3,150 sheets and add versatility for less reloading. (Letter-size sheets only for LCT)

Cabinet Stand* (optional)
Add a convenient storage space for supplies when the standard paper supply meets your needs.

*Cannot be combined with other optional paper sources.

MP 2352/MP 2852/MP 3352 Digital Imaging System

SECURE > PRODUCE > SHARE > MANAGE > ADVANCE >

Intuitive 8.5" Color Control Panel
This easy-to-use control panel simplifies operations.

One-Bin Tray (optional)
Separate copy output from fax/print output.

Duplex Unit (standard)
Support environmental initiatives, cut paper use in half and save on supply costs by printing double-sided documents.

100-Sheet Bypass Tray (standard)
Print envelopes, labels, transparencies and more on a variety of paper types and sizes.

Choose the Configuration that Best Meets Your Office Requirements

Configuration	Copier	Copy/Print/Scan
Speeds Available	28 ppm, 33 ppm	23 ppm, 28 ppm, 33 ppm
ARDF	Optional	Standard
Print/Scan Connectivity	Optional	Standard
Fax	Optional	Optional
Security	Standard DataOverWriteSecurity & HDD Encryption	Standard DataOverWriteSecurity & HDD Encryption
System Memory (Std./Max.)	512 MB/1 GB	1 GB/1 GB
Hard Disk Drive	Optional	Standard 120 GB
Personal Paperless Document Manager	Optional	Standard 1 License

Management Made Easy

Engineered for maximum convenience, the Savin MP 2352/MP 2852/MP 3352 simplifies administrative tasks—including system management, device monitoring and troubleshooting.

- Access a wide range of system settings including supply levels and job details, assign e-mail notification to key team members, cancel jobs and reboot the system remotely with Web Image Monitor.
- Use Web SmartDeviceMonitor to configure, monitor and manage your entire fleet of connected Savin devices—right from your desktop.
- Promote proactive maintenance with automated alerts for low supplies and errors with Auto-Email Notification.
- Monitor systems with @Remote. The built-in web-enabled support application automates meter submissions, critical event notifications and remote firmware updates.

Advanced Document Security

Help ensure document integrity at every stage of the creation and distribution process with comprehensive security that protects your most important information assets.

- Protect sensitive documents on the hard drive with the standard DataOverwriteSecurity System (DOSS). It automatically overwrites the hard drive to prevent retrieval of confidential information when enabled.
- Add a powerful layer of security with standard HDD Encryption and encode stored documents for maximum protection from hackers.
- Safeguard critical data during transmission with Encrypted PDF Transmission. Use it to scramble and encrypt transparent and vulnerable data, including user name and password.
- Ensure accurate user authentication with a variety of methods, including user codes, LDAP, Windows Authentication and card based authentication solutions.

Fast Fax Transmission

Handle any workload—whether it's one page or hundreds—with innovative faxing features that simplify management and expedite delivery.

- Send and receive faxes electronically with Internet faxing, using either a PC or conventional fax numbers via IP to save on transmission costs and paper.
- Preview pages prior to transmission to decrease errors and detect blank pages.
- Route inbound faxes to an e-mail address or network folder to ensure timely, accurate delivery and distribution.

Document Server

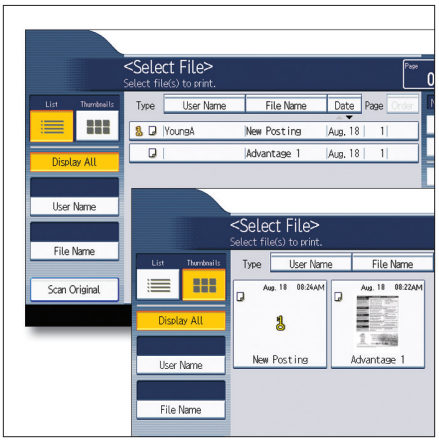

Store up to 3,000 frequently-used documents in the Document Server for instant reprinting, refaxing and scanning.

Locked Printing

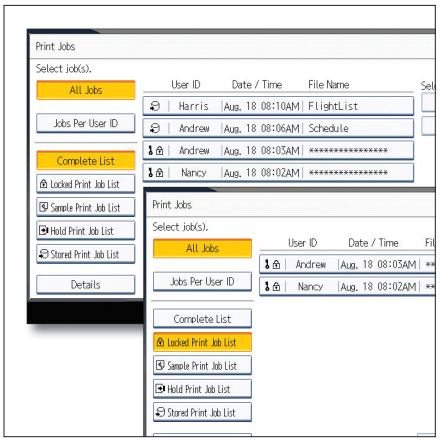

Minimize access to sensitive documents. Locked Print allows users to delay printing until they enter a password at the device.

LAN FAX

Fax documents right from your desktop to maximize convenience and boost efficiency.

MP 2352/MP 2852/MP 3352 Digital Imaging System

SECURE > PRODUCE > SHARE > MANAGE > ADVANCE >

Enable Mobile Workers

Give mobile users an easy way to print documents while on the go without compromising security.

- Print documents, e-mails and Web content from anywhere with optional HotSpot Printing. Users can forward documents to the MFP via PDAs or other Internet-enabled devices without installing drivers or software.
- Accommodate visitors, such as employees visiting branch offices, with the Mail-to-Print feature. This allows users to send emails with attachments directly to the MFP to print PDF/JPG files automatically without installing print drivers.

Customize Workflows

The Savin MP 2352/MP 2852/MP 3352 offers innovative tools that accommodate the unique demands of your environment and streamline business-critical activities.

- Customize MFP touch-screen menus directly from the PC quickly without IT support and create secure, searchable PDFs from text files, spreadsheets and scanned documents with Personal Paperless Document Manager (PPDM) software.
- Expedite data entry at the MFP and navigate embedded software programs—including GlobalScan NX, eCopy ShareScan, NSi AutoStore and other applications—with the optional USB keyboard*.
- Connect to Cloud applications such as DocumentMall. Documents can be securely scanned to a folder in DocumentMall or downloaded for printing.
- Develop customized applications using Embedded Software Architecture, a Java-compatible Software Development Kit (SDK).

Sustainable Efficiency

Conserve energy while boosting productivity. Savin has incorporated a variety of environmentally-friendly features that conserve time and money.

- Reduce paper consumption by printing double-sided documents—and reducing output by up to half—with standard automatic duplexing.
- Start printing and copying quickly. The Savin MP 2352/MP 2852/MP 3352 warms up in as few as 4.5 seconds and recovers from Sleep Mode as quickly as 4 seconds.
- Save energy with fast first-copy times. This digital imaging system can produce a first copy in as little as 14 seconds.

*Native embedded scanning is not supported.

HotSpot Printing

Print from mobile devices to HotSpot-enabled MFPs and printers for fast, convenient printing on the go.

High-Yield Consumables

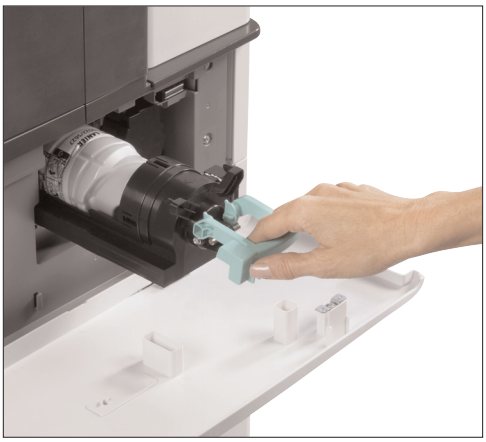

High-yield consumables help minimize operating costs and downtime. Genuine Savin supplies foster optimal performance and superior print quality.

The Total Green Office Solution

Savin continues its long-standing commitment to developing office solutions with environmentally friendly and superior energy- and supply-saving features, without compromising productivity.

Our earth, Our tomorrow

ENERGY STAR

MP 2352/MP 2852/MP 3352 SPECIFICATIONS

SECURE > PRODUCE > SHARE > MANAGE > ADVANCE >

ENGINE/COPIER SPECIFICATIONS

Scanning Element	One-Dimensional Solid Scanning Through CCD
Printing Process	Single Laser Beam Scanning & Electrophotographic Printing
Toner	Dry, Dual Component
Copy Resolution	600 x 600 dpi
Quantity Indicator	Up to 999
First Copy Time	MP 2352: Less than 5.4 seconds MP 2852/MP 3352: Less than 4.5 seconds
Warm-Up Time	With Hard Disk Drive: Less than 20 seconds Without Hard Disk Drive: Less than 14 seconds
System Memory (std./max)	Copier Basic: 512 MB RAM/1 GB RAM + 120 GB HDD Print/Scan: 1 GB RAM + 120 GB HDD
Original Type	Book/Sheet/Object
Maximum Original Size	Up to 11" x 17"
Copy Size	5.5" x 8.5" to 11" x 17"
Copy Type	Plain Paper, Transparencies, Letterhead, Color Paper, Pre-Punched Paper, Envelopes, Cardstock, Recycled
Continuous Copying Speed	MP 2352: 23 copies/minute (LTR) MP 2852: 28 copies/minute (LTR) MP 3352: 33 copies/minute (LTR)
Power Source	120V/60Hz/12A
TEC Value	MP 2352: 1,870 Wh (Print/Scan) MP 2852: 2,210 Wh (Print/Scan) MP 3352: 2,511 Wh (Print/Scan)
Standard Paper Capacity	500 sheets x 1 tray, 550 sheets x 1 tray, and 100-Sheet Bypass Tray
Maximum Paper Capacity	3,150 sheets
Paper Size	5.5" x 8.5" to 11" x 17" A6 to A3, B6 to B4
Paper Weight	14 – 28 lb. Bond/52 – 105 g/m² (Duplex) 14 – 42 lb. Bond/52 – 157 g/m² (Tray 1, 2 and Bypass)
Standard Output Tray Capacity	500 sheets (Letter) 250 sheets (Legal, Ledger)
Maximum Output Capacity	1,600 sheets (Bridge Unit + 1 Bin + 1,000-Sheet Finisher)
Reduction Ratios	25%, 50%, 65%, 73%, 78%, 85%, 93%, 100%
Enlargement Ratios	121%, 129%, 155%, 200%, 400%
Zoom	25% to 400% in 1% increments
Standard Features	Auto Magnification, Auto Paper Select, Auto Tray Switch, Booklet/Magazine Copy*, Center/Border Erase, Chapters, Combine Mode, Cover Insertion, Directional Magnification, Document Server (3,000 File Capacity)*, Duplex, Electronic/Rotate Sorting, Full-Color VGA Touch Screen Control Panel, Negative/ Positive, OHP Slip Sheet, 8 Job Presets*, 10 Job Programs, 500 User Codes, Sample Copy, Series Copy*, User Stamps*
Dimensions (WxDxH)	
Copier Basic:	23.1" x 25.7" x 27.9" 587 mm x 653 mm x 709 mm
Print/Scan:	23.1" x 25.7" x 32.6" 587 mm x 653 mm x 829 mm
Weight	
Copier Basic:	143 lbs., 65 kg
Scan/Print:	165 lbs., 75 kg

PRINTER SPECIFICATIONS

Standard on Print/Scan Configuration / Option on Copier Basic Configuration

Print Speed	MP 2352: 23 ppm (LTR) MP 2852: 28 ppm (LTR) MP 3352: 33 ppm (LTR)
CPU	RM7035C 533 MHz
Standard Interfaces	10Base-T/100BaseTX Ethernet, USB 2.0
Optional Interfaces	IEEE 802.11a/b/g Wireless LAN, Bluetooth, IEEE 1284 Parallel, Gigabit Ethernet
Memory Capacity	Shared with Copier
Network Protocol	TCP/IP, IPX/SPX
Network Operating Systems	Windows Vista/7/XP/Server 2003/Server 2008 Netware 6.5 or later, Unix; Sun Solaris, HP-UX, SCO OpenServer, Red Hat Linux, IBM AIX, Mac OS X 10.2 or later, SAP R/3, NDPS Gateway, IBM iSeries/ AS/400® using OS/400 Host Print Transform, Citrix Presentation Server 4.5/Citrix Xen App 5.0
Utilities	@Remote, SmartDeviceMonitor, Web SmartDeviceMonitor, Web Image Monitor
Page Description Languages	PCL5e/6 (standard), Adobe PostScript 3, IPDS (optional)
Print Resolution	Up to 600 dpi
Fonts for PCL5e/6	45 Scalable Fonts, 6 Bitmap Fonts, 13 International Fonts
Fonts for PS3	136 PostScript Fonts
Standard Features	Sample/Locked/Hold/Stored Print

SCANNER SPECIFICATIONS

Standard on Print/Scan Configuration / Option on Copier Basic Configuration

Scanning Speed B&W/Color	Embedded Scanning: 50/45 ipm (@ 200 dpi)
Scanning Resolution	600 dpi
Scan Area	Up to 11" x 17"
Standard Interfaces	10Base-T/100BaseTX Ethernet
Optional Interfaces	IEEE 802.11a/b/g Wireless LAN, Gigabit Ethernet
Protocol	TCP/IP, NCP, SMB, SMTP, POP 3, LDAP, FTP
Memory Capacity	Shared with Copier
File Types	Single and Multi-Page TIFF/PDF, High Compression PDF, Single-Page JPEG
Standard Features	Embedded Scan-to-Email/HDD/Folder/ URL and TWAIN, Color Scan

FAX SPECIFICATIONS (OPTION)

Circuit	PSTN, PBX
Compatibility	ITU-T G3
Resolution	200 x 200/100 dpi 400 x 400 dpi (optional)
Compression Method	MH, MR, MMR, JBIG
Scanning Speed	0.35 seconds (LEF)
Modem Speed	33.6 Kbps with Auto Fallback
Transmission Speed	G3: 3 seconds per page (MMR Compression) G3: 2 seconds per page (JBIG Compression)
SAF Memory	4 MB standard/28 MB maximum 320 pages/2,240 pages
Max Auto Dials	2,000
Group Dials	100 (max. 500 numbers per group)
Features	Dual Access, Duplex Reception, Image Rotation, 1 Hour Backup, LAN-Fax Capability*, Internet Faxing (T.37)*, IP Faxing (T.38)*, Fax Forwarding to E-Mail/HDD/Folder*
Optional Features	Simultaneous Operation of up to 3 lines (G3 x 3)

SECURITY FEATURES

Standard on Print/Scan Configuration / Option on Copier Basic Configuration

DOSS, HDD Encryption, S/MIME, IPsec Communication, Locked Print Password Encryption, Encrypt Address Book, SSL, User Authentication, Quota Setting/Account Limit, SNMP v3, SMTP over SSL and PDF encryption

HARDWARE ACCESSORIES

PB3120 Paper Feed Unit (Option)

Paper Size	7.25" x 10.5" to 11" x 17"/A5 to A3
Paper Weight	14 to 42 lb. Bond/52 to 157 g/m²
Paper Capacity	1 x 550 sheets
Dimensions (WxDxH)	22.9" x 24.8" x 4.8" 580 mm x 629 mm x 120 mm

PB3130 Paper Feed Unit (Option)

Paper Size	7.25" x 10.5" to 11" x 17"/A5 to A3
Paper Weight	14 to 42 lb. Bond/52 to 157 g/m²
Paper Capacity	2 x 550 sheets
Dimensions (WxDxH)	22.9" x 24.8" x 10.3" 580 mm x 629 mm x 260 mm

PB3140 Large Capacity Tray (Option)

Paper Size	8.5" x 11"/A4
Paper Weight	14 to 42 lb. Bond/52 to 157 g/m²
Paper Capacity	2,000 sheets x 1
Dimensions (WxDxH)	22.9" x 24.8" x 10.3" 580 mm x 629 mm x 260 mm

One-Bin Tray BN3090 (Option)

Paper Size	5.5" x 8.5" to 11" x 17"/A5 to A3
Paper Weight	16 to 28 lb. Bond/60 to 105 g/m²
Paper Capacity	100 sheets

500-Sheet Internal Finisher Type 3352

Paper Size	7.25" x 10.5" to 11" x 17"/A3, A4
Paper Weight	14 lb. Bond to 140 lb. Index/ 52 to 256 g/m²
Stack Capacity	500 Sheets (8.5" x 11" or smaller) 250 Sheets (8.5" x 14" or larger)
Staple Capacity	50 Sheets (8.5" x 11") 30 Sheets (8.5" x 14" or larger)
Staple Position	Top 1, Bottom 1, Left 2, Top 2
Dimensions (WxDxH)	19.5" x 18.8" x 6.4" 495 mm x 477 mm x 161 mm
Punch Kit PU3020 NA (Option)	2 or 3 hole punch

SR3070 500-Sheet Finisher (Option)

Paper Size	7.25" x 10.5" to 11" x 17"/A3, A4
Paper Weight	14 to 42 lb. Bond/52 to 157 g/m²
Stack Capacity	500 sheets (8.5" x 11" or smaller) 250 sheets (8.5" x 14" or larger)
Staple Capacity	50 sheets (8.5" x 11") 30 sheets (8.5" x 14" or larger)
Staple Position	Top Slant, Bottom Slant, Left 2, Top 2
Dimensions (WxDxH)	15.6" x 21.7" x 10.9" 396 mm x 551 mm x 275 mm

SR3090 1,000-Sheet Finisher (Option)

Paper Size (Upper Tray)	5.5" x 8.5" to 11" x 17"/A6 to A3
Paper Weight (Upper Tray)	14 lb. Bond to 140 lb. Cover/ 52 to 260 g/m²
Stack Capacity	Upper Tray: 250 sheets (8.5" x 11" or smaller) 50 sheets (8.5" x 14" or larger) Shift Tray: 1,000 sheets (8.5" x 11" or smaller) 500 sheets (8.5" x 14" or larger)
Staple Capacity	50 sheets (8.5" x 11") 30 sheets (8.5" x 14" or larger)
Staple Position	Top 1, Bottom 1, Left 2, Top 2
Dimensions (WxDxH)	10.7" x 20.5" x 31.2" 270 mm x 520 mm x 790 mm

SR3100 Booklet Finisher (Option)

Paper Size (Upper Tray)	5.5" x 8.5" to 11" x 17"/A6 to A3
Paper Size (Shift Tray)	7.25" x 10.5" to 11" x 17"/A3, A4
Paper Weight	14 to 28 lb. Bond/52 to 105 g/m² (Upper Tray); 14 to 140 lb. Index/52 to 256 g/m² (Shift Tray)
Stack Capacity	Upper Tray: 100 sheets (8.5" x 11" or smaller) 50 sheets (8.5" x 14" or larger) Shift Tray: 1,000 sheets (8.5" x 11" or smaller) 500 sheets (8.5" x 14" or larger)
Staple Capacity	50 sheets (8.5" x 11") 30 sheets (8.5" x 14" or larger)
Staple Position	Top 1, Center, Left 2, Top 2
Saddle Stitch Capacity	1 Set (10 sheets)
Saddle Stitch Postion	Center (2 positions)
Dimensions (WxDxH)	21.1" x 23.7" x 36.7" 535 mm x 600 mm x 930 mm
Punch Kit PU3000 NA (Option)	2 or 3 hole punch

ARDF DF3060

Standard on Print/Scan Configuration / Option on Copier Basic Configuration

Paper Size	5.5" x 8.5" to 11" x 17", A5 to A3
Simplex Paper Weight	11 to 34 lb. Bond/40 to 128 g/m²
Stack Capacity	50 sheets
Dimensions (WxDxH)	21.7" x 19.6" x 4.8" 550 mm x 496 mm x 120 mm

ADDITIONAL ACCESSORIES

3L68-19 USB Keyboard, ADF Handle Type C, Bluetooth Interface Unit Type D, Bridge Unit BU3050, Card Reader Bracket Type 3352, Caster Table Type D, DataOverwriteSecurity Unit Type I[2], External USB Keyboard, FAC 52 Cabinet, File Format Converter Type E, G3 Interface Unit Type 3352, Gigabit Ethernet Board Type A, Handset Type 3352, Hard Disk Drive Type 3352[1], IEEE 802.11 a/g Interface Unit Type J, IEEE 1284 Interface Board Type A, Internal Shift Tray SH3050, IPDS Unit Type 3352, Key Counter Bracket Type H, Optional Counter Interface Unit Type A, Platen Cover Type 3352[1], PostScript Unit Type 3352, Printer/Scanner Unit Type 3352[1], USB 2.0/SD Slot Type H, VM Card Type N[1], VZ G106030 Keyboard Bracket

Note: Some accessories require additional equipment or may be prerequisites for other options.

*Copier Basic Configuration requires additional options.

For maximum performance and yield, we recommend using genuine Savin parts and supplies.

1 Copier Basic Configuration only.
2 ISO 15408 Certified.

F.P.O.

www.savin.com

Savin Five Dedrick Place, West Caldwell, NJ 07006

SAVIN® is a registered trademark of Ricoh Americas Corporation. All other trademarks are the property of their respective owners. The content of this document, and the appearance, features and specifications of Savin products and services are subject to change from time to time without notice. Products are shown with optional features. While care has been taken to ensure the accuracy of this information, Savin makes no representation or warranties about the accuracy, completeness or adequacy of the information contained herein, and shall not be liable for any errors or omissions in these materials. Actual results will vary depending upon use of the products and services, and the conditions and factors affecting performance. The only warranties for Savin products and services are as set forth in the express warranty statements accompanying them.

S3306

FSC
Mixed Sources
Product group from well-managed forests, controlled sources and recycled wood or fiber
Cert no. SW-COC-002521
www.fsc.org
© 1996 Forest Stewardship Council